| RoHS Compliant | Rev. | Decription/Eco | Date | By |
|---|---|---|---|---|
| | | | | |

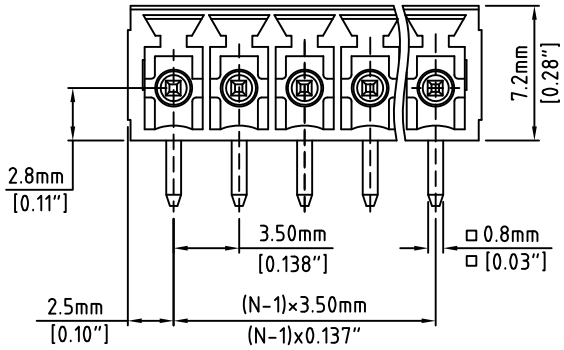


N=Number of Positions

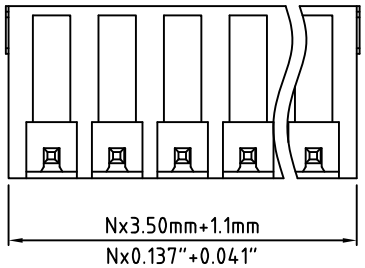


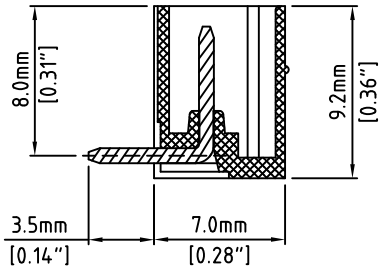


| Material: | |
|---|---|
| Contact Solder Pin: | Brass, Tin Plated |
| Insulating Body: | Polyamide, UL94V-0, Blue |
| **Electrical** | |
| Voltage Rating: | 300 VAC |
| Current rating: | 10 AMPS |
| Withstand Voltage: | 1500 VAC, Test time 60 seconds |
| **Mechanical** | |
| Operating Temperature: | -40°C to +105°C<br>-40°F to +221°F |
| Soldering Temperature: | 260°C, 500°F for 5 seconds max. |
| Safety Approval: | C US |

## Part Number Configuration.

HC1350-XX-600

Number of Positions — Color 6-Blue

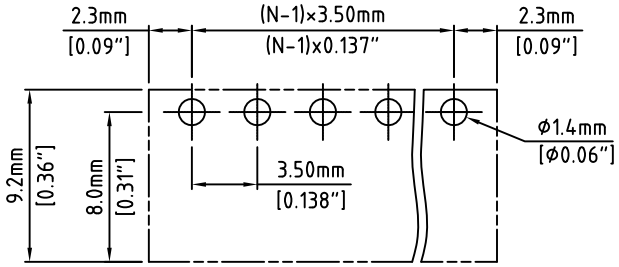


P.C.B. Layout

(Other Color Options Available
Please consult Factory)

Max Number of Positions = 24

UNLESS OTHERWISE SPECIFIED BREAK ALL SHARP EDGES AND DEBURR ALL HOLES

TITLE: 3.50mm SPACING, PLUGGABLE HEADER HORIZONTAL CLOSED

LIMITS: UNLESS OTHERWISED SPECIFIED
HUND.±.02 FRACT.±1/64
THOU.±.005 ANGLE±1°

SCALE

THIS IS A CONFIDENTIAL DRAWING AND MUSTBE TREATED AS SUCH. NO DISTRIBUTION IS ALLOWED WITHOUT WRITTEN APPROVAL BY EBY ELECTRO INC.

EBY Electro Inc.
PLAINVIEW, NY 11803

IMPORTANT DISCLAIMER: All information provided on this print is for reference. Always perform your own tests and acquire samples and further information to determine product suitability. While we make effort to provide accurate information, we cannot be responsible for errors either of omission or typographical. EBY Electro, Inc. assumes no responsibility for the use or suitability of any product. All products and specifications are subject to change without prior written notice.

METRIC LIMITS
ONE PLACE ±0.3
TWO PLACES ±0.10
ANGLE ± 1°

| | | | |
|---|---|---|---|
| DRAWN | MWP | DATE | 11/13/02 |
| CHECKED | | DATE | |
| APPROVED | | DATE | |

SIZE: A

DRAWING NUMBER: HC1350-XX-600

REV.